NOTWASHINGTON METROPOLITAN TRANSIT AUTHORITY
600 FIFTH STREET, NW
WASHINGTON, DC 20001

Tender Number:	IFB-FQ18102/KKB
Date of Issuance:	May 25, 2018
Tender Due Date:	May 16, 2018
Revised Tender Opening Date:	June 6, 2018

AMENDMENT NO. 05
TO
INVITATION FOR BIDS
FOR
Replacement of Chiller and Cooling Tower Accessories at Eight (8) Metro-rail Stations:
DC, MD, and VA
IFB-FQ18102/KKB

TO WHOM IT MAY CONCERN:

The Invitation for Bids Documents accompanying IFB FQ18102/KKB requesting proffers for above procurement action are herewith changed in part as listed below. The changes are bolded and denoted with **##** signs.

1. SECTION 15900A HVAC INSTRUCTION AND CONTROLS

DELETE	SUBSTITUTE	DESCRIPTION
Section 15900A, HVAC, Instrument and Controls Pages 15900A--6 thru. 15900A-15	Section 15900A, HVAC, Instrument and Controls Pages 15900A--6 thru. 15900A-17, Amendment No. 5	Added Chiller Control Panel, Figure 27 Field Control Wiring Diagram, and Field Wiring Diagram Notes

2. CONTRACT DRAWINGS

DELETE	SUBSTITUTE	DESCRIPTION
Drawing Nos. CWPC03-M-103-Farragut West, CWPE05-M-101-Georgia Ave-Petworth, and CWPB11-M-101-Glenmont, Amendment No. 02	No substitution	Inadvertently included erroneous Drawing Sets

3. SECTION 00800, SUPPLEMENTAL CONDITIONS

DELETE	SUBSTITUTE	DESCRIPTION
Section 00800, Wage Rates, Page Appendix D-8 Amendment No. 03. Pages Appendix D-9 thru 10	Section 00800, Wage Rates, Pages Appendix D-8 thru Appendix D-10. Amendment No. 05	Revised Wage Rates

4. CONTRACT DRAWINGS

DELETE	SUBSTITUTE	DESCRIPTION
In lieu of Deleting Drawings Set 19 of 29, Drawing No. CWPA6-E-100, Sheet No. 115 of 173, Amendment No. 04. Delete Drawings Set 19 of 29, Drawing No. CWPG2-M-103 Sheet No. 115 of 173	No Replacement	Drawing No. CWPA6-E-100, Sheet No. 115 of 173 was cited inadvertently. The correct drawing number is drawing No. CWPG2-M-103

5. There are no further changes.

6. THE SOLICITATION PROVISIONS ENTITLED "SOLICITATION AMENDMENT" IS APPLICABLE TO THIS AMENDMENT. THE CHANGES SET FORTH ARE HEREWITH INCORPORATED INTO THE ABOVE CITED SOLICITATION. THE HOUR AND DATE SPECIFIED FOR RECEIPT OF PROFFERS IS NOT EXTENDED AND WILL REMAIN JUNE 6, 2018 AT 2:00 PM EST.

7. Acknowledgement: Bidders are required to acknowledge receipt of this amendment on Bid Form in the space provided. Failure to acknowledge all Amendments may cause the proffer to be considered non-responsive to the invitation for bids, which may cause its rejection.

****

Issued By: _____

Norie A. Calvert, Contracting Officer, Office of Procurement and Materials

a. One (1) RS 485 port operating at a minimum of 19.2 KB for LAN communication.
b. One (1) RS 232 port for local terminals, modem, chiller interface card or printer.
c. Application program shall be stored in battery backed RAM, with the option to back up the application program in on board EPROM, or in non-volatile Flash memory.
d. Meet FCC part 15, Subpart J, Class A requirements for electrical emission.
e. Battery backed real time clock and RAM. Data to be retained for minimum of one (1) years by battery backup. Time clocks are synchronized between DDCP's.
f. Watchdog relay with both normally open and normally closed contacts that switches state on either a power or a hardware or fatal software error. On DDCPs lacking a dedicated Watchdog relay, a dedicated output programmed to act as a Watchdog will suffice.
g. Watchdog timer circuit to automatically initiate "Reboot" on detection of processor malfunction.
h. Automatic reboot feature to restart the processor after power failing.
i. Universal inputs to accept inputs of 0-10 VDC, 4-20 mA, resistance, thermistor, or binary input, selectable with a factory installed jumper.
j. Universal outputs, individually fused, suitable for either 0-10 VDC analog or digital outputs.
k. Each DDCP shall contain predefined controller software enabling the user to configure:

1) User Reports
2) Sequencing
3) Histories

3. Control panels for water treatment systems shall comply with the reference drawings shown as part of the contract drawings package.

B. Terminal Unit Controllers:

1. Terminal unit controllers shall be UL listed and have, as a minimum, the following:

a. Pre-packaged differential pressure sensor and damper actuator
b. Flash memory - eliminating the need for back-up battery
c. Permanent storage of changeable parameters
d. One (1) RS 485 port operating at 19.2 or 50 kB for LAN communication, computer or modem
e. One (1) universal RS 232 port for connecting of a local terminal computer or modem
f. Universal inputs to accept inputs of 0-5 VDC, 0-10 VDC, 4-20mA, resistance, thermistor or binary, selectable with a jumper
g. Digital outputs
h. Watchdog timer and circuitry to monitor both hardware and software. If either a fatal hardware or software error is detected, the watchdog circuitry will initiate a system reboot.
i. Each having its own addressable node making it part of the ISN
j. The ability to upgrade or modify software via the network, eliminating the need to physically access the unit

C. Unitized cabinet with suitable brackets for wall or floor mounting, located adjacent to each system under automatic control. Provide common keying for all panels.

1. Fabricate panels of 0.06-inch thick, furniture-quality steel, or extruded-aluminum alloy, totally enclosed, with hinged doors and keyed lock and with manufacturer's standard shop-painted finish.
2. Panel-Mounted Equipment: Controllers, relays, and automatic switches.

D. **## Please see below the requested Note and Panel Schedule for each Chiller Plant Location. ##**

"ALL CHILLER CONTROL PANEL REQUIRES 120VAC POWER SOURCE FOR CHWP & CWP VFD ENABLE SIGNAL."

## CHILLER PLANT LOCATION	PANEL SCHEDULE			
	Load Description	Wire Size COND	PNL	Name & Location
FARRAGUT NOTH (A02)	Chiller Control Panel	12 + 12G	¾"C	PPA1 & Chiller RM
BETHESDA (A09)	Chiller Control Panel	12 + 12G	¾"C	CPL & Chiller RM
MEDICAL CENTER (A10)	Chiller Control Panel	12 + 12G	¾"C	CPL & Chiller RM
FEDERAL CENTER SW (D04)	Chiller Control Panel	12 + 12G	¾"C	CP2 & Chiller RM
CULUMBIA HEIGHTS (E04)	Chiller Control Panel	12 + 12G	¾"C	NANSS & MECH
CAPITOL HEIGHTS (G02)	Chiller Control Panel	12 + 12G	¾"C	RSPA & TPSS RM
CLARENDON (K02)	Chiller Control Panel	12 + 12G	¾"C	LA & Chiller Room
BALLSTON (K04)	Chiller Control Panel	12 + 12G	¾"C	CH2 & Chiller Room

2.04 SENSORS:

A. Temperature Sensors- sensors to be Resistance Temperature Device (RTD) type and contain an integral 4-20mA signal conditioner, manufactured by Honeywell C7041 or approved equal:

1. Well sensors shall be thermistor type enclosed in a 304 stainless steel tube with thread brass fitting. Sensor shall fit a ½" threaded saddle or Thredolet®. Sensor shall be furnished with a brass well suitable for 250 psig. If operating pressure is above 250 psig, a stainless steel well shall be supplied. Sensors shall be a Honeywell C7041D or approved equal. The sensor shall have weather- proof utility box
2. Space sensors shall be thermistor type mountable on a standard handy box. All hardware required for mounting on a handy box shall be included. Sensor shall be accurate to

±0.36°F between 32°F and 100°F. Sensors shall be a Honeywell C7041C or approved equal. Sensor range shall be 0°F to 100°F and be furnished with all hardware for hand box mounting.

3. For ducts greater than 10 square feet or where stratification is likely, sensor shall be averaging thermistor, RTD or 1000 Ohm resistance elements. Sensor shall be a Honeywell C7041R or equivalent.

B. Humidity Sensors:

1. Humidity sensors shall have ± 3% accuracy using ceramic technology. It shall be possible to change sensing elements without recalibrating the sensor. Indoor units shall have an operating range of 0-95% RH non-condensing over a 40°F to 110°F range, Honeywell H7635A2012 or equivalent. Outdoor Honeywell H7635C2015 or equivalent and duct Honeywell H7365B2018 or equivalent humidity sensors shall have a range of 0-95% RH non-condensing and be temperature compensated to operate from -40°F to 240°F.

C. Pressure Transducer/Sensors - Water:

1. Sensor and signal conditioner shall be mounted in NEMA 4X enclosure. Output of sensor shall be 4-20 mA. All sensor wetted parts shall be 316 stainless steel. Accuracy shall be ±0.1% of span, stability ±0.1% of URL.

D. Differential Air Pressure Sensors:

1. Sensor shall be a two-wire 4-20 mA device with a static error of ± 0.5% of full scale.
2. Sensor shall be Honeywell P7640U or approved equal. Accuracy shall be ±1% of full scale.

E. Differential Pressure Switches - Water:

1. Differential pressure switches shall be Honeywell PWT100 or approved equal. Switch shall be mounted in a NEMA 4 enclosure. Temperature compensated range 32°F to 122°F. All sensor wetted parts shall be 316 stainless steel.

F. Temperature Limit Controllers:

1. Temperature limit controller shall be two-position controllers meeting the following requirements:

   a. Low limit thermostats shall be of the manual reset type with two electrical switches. One set of contacts shall provide a binary input to the ISN controller, the other set of contacts shall be wired to break the safety circuit of the fan starter and prevent fan operation when the starter is in either the "Hand" or "Auto" position. Elements shall be vapor pressure type, responding to the lowest temperature sensed by any 12 inch section. Minimum element length shall be 20 ft. or 1 ft. per square foot of coil face, whichever is greater. Multiple controllers shall be used on large coils where a single element cannot meet the coverage requirements.
   b. High limit cut-out controllers not furnished as an integral part of an air handling unit shall be two-position manual reset devices wired to shut down the supply fan (and return fan when not used for fire/smoke evacuation) and signal the ISN controller of a critical alarm. Supply air limit controls shall be set at 180°F for supply air and 125°F for return air.

G. Duct Smoke Detectors:

1. Duct smoke detectors shall be UL listed under UL268A. Detectors shall have dual contacts and signal the ISN controller of a critical alarm. Detectors shall be ionization type and operate at air velocities from 300 to 4000 FPM. Visual indication of alarm and pilot must be provided on the front cover of the detector. Contacts shall be provided for remote trouble indication. Sampling tube shall be provided to span the width of duct. Duct smoke detectors shall be compatible with existing upgraded microprocessor controlled fire and intrusion alarm (FIA) system using ADT addressable type detectors manufactured by Edwards System Technology (EST3).

H. Level Transmitter:

1. Level transmitter shall be non-contact ultrasound level transmitter were sump volume is greater than 45 gallons. Smaller sumps shall be non-mercury float type switch or conductivity probes.

I. Interface Panels:

1. Interface panels shall be NEMA 12 with subpanels as manufactured by Hoffman or approved equal. Panels shall be assembled and wired by skilled electricians. All wires shall be labeled using heat shrink machine printed sleeves and terminated on terminal strips.

J. Equipment Operation Sensors as Follows:

1. Status Inputs for Fans: Differential-pressure switch with adjustable range of 0 to 5 inches wg.
2. Electric Motors Operating Condition: Current-Transducer True RMS.

K. Horn/ Strobe Combination:

1. Self-contained enclosure rated for indoor/ outdoor siren and strobe, with a sturdy aluminum back plate, polycarbonate housing, dual tamper protection.
2. 120 db sound output, ability to mount directly on the wall or 4” square back box, strobe color as required by owner.

2.05 ACTUATORS:

A. Electric Motors: Size to operate with sufficient reserve power to provide smooth modulating action or two-position action as indicated.

1. Permanent Split-Capacitor or Shaded-Pole Type: Gear trains completely oil immersed and sealed. Equip spring-return motors with integral spiral-spring mechanism in housings designed for easy removal for service or adjustment of limit switches, auxiliary switches, or feedback potentiometer.
2. Spring-Return Motors for Valves: Size for running and breakaway torque of 150 in. x lbf.
3. Spring-Return Motors for Dampers: Size for running and breakaway torque of 150 in. x lbf.
4. Run time: 60 seconds

B. Damper Actuators:

1. Damper actuators shall be electronic type direct coupled (over the shaft), enabling it to be mounted directly to the damper shaft without the need of a connecting linkage. Where noted in the sequence of operation, actuators shall be furnished with end switches. Where used

for outside air, damper actuators shall be spring return for failsafe operation. Actuators shall be UL 873 listed and manufactured under ISO 9001.

2.06 CONTROL VALVES:

A. Control Valves: Factory fabricated, of type, body material, and pressure class based on maximum pressure and temperature rating of piping system, unless otherwise indicated. Unit Control valves shall be electronic type Butterfly valves, 3-way as required. Both valve and actuator shall be manufactured under ISO 9001. Valve bodies shall be rated for 600 PSI and shall incorporate a blow-out proof stem design. All valves shall have a minimum range ability of 250 to 1.

B. Globe and Check Valves NPS 2 and Smaller: Bronze body, bronze trim, rising stem, renewable composition disc, and screwed ends with backseating capacity repackable under pressure.

C. Globe and Check Valves NPS 2-1/2 and Larger: Iron body, bronze trim, rising stem, plug-type disc, flanged ends, and renewable seat and disc.

D. Hydronic system globe valves shall have the following characteristics:

1. Rating: Class 125 for service at 125 psig and 250 deg F operating conditions.
2. Internal Construction: Replaceable plugs and seats of stainless steel or brass.

   a. Single-Seated Valves: Cage trim provides seating and guiding surfaces for plug on top and bottom of guided plugs.
   b. Double-Seated Valves: Balanced plug; cage trim provides seating and guiding surfaces for plugs on top and bottom of guided plugs.

3. Sizing: 3-psig maximum pressure drop at design flow rate.

2.07 CONTROL WIRING:

A. Electronic Cable for Control Wiring shall be as required by the manufacturer of the equipment being installed.

B. Provide a source 120 volts or less, 60 Hz, two pole, three wire with ground. All devices shall be UL listed or FM approved.

C. Transformers shall conform to UL 506. Provide a fuse on the secondary side of the transformer.

D. Surge Protection: Surge and transient protection shall consist of devices installed external to digital controllers.

E. Power Line Surge suppressors shall be installed on all incoming A/C power. Provide surge suppressors external to the digital controllers. Surge suppressors shall be rated by UL 1449, and shall have a clamping voltage rating below the following levels:

1. Normal mode (line to neutral): 350 volts.
2. Common mode (line to ground): 350 volts.

F. Sensor and Control Wiring Surge Protection: Controllers shall have sensor and control wiring surge protection with optical isolation, metal oxide varistor, or silicone avalanche devices. Fuses are not permitted for surge protection.

G. Wiring: Provide complete electric wiring for temperature control apparatus, including wiring to transformer primaries. Control circuit conductors that run in the same conduit as power conductors shall have the same insulation level as the power conductors. Circuits operating at 100 volts or more shall be in accordance with the provisions of Division 16. Circuits operating at less than 100 volts shall be defined as low voltage. All cable installed outside of the Control Panels shall be installed in rigid steel conduit. Provide circuit and wiring protection as required by NFPA 70. Conduit and boxes shall be in accordance with division 16 provisions.

H. AC Control Wiring:

1. Wiring for 24 volts circuits shall be insulated copper, minimum 18 AWG, and shall be rated for 300 volts AC service. Insulation shall be non-PVC material. Jacket shall be low smoke and shall be free of PVC and PVC-based compounds.
2. Wiring for 120 volts AC service shall be minimum 14 AWG and shall be rated for 600 volts AC service. See Section 16120, Wire and Cable, for cable insulation and low smoke jacket requirements.

I. Analog Signal Wiring between Sensors and ACU Direct Digital Control Equipment: Signal wiring for analog inputs and analog outputs shall be 18 AWG single or multiple twisted pair. Each pair greater than one shall be 100% shielded and have a 20 AWG drain wire. The exception is direct connected RTD wiring which shall be 18 AWG minimum twisted pair, 100% shielded and with a 20 AWG drain wire. Each wire shall have non-PVC insulation rated at 300 volts AC. Cables shall have an overall aluminum- polyester or tinned-copper cable-shield tape, overall 20 AWG tinned copper drain wire, and overall cable jacket. Jacket shall be low smoke and shall be free of PVC and PVC- based compounds. Install analog signal wiring in conduit separate from AC power circuits.

J. Low Capacitance RS-485 Cable Between ACU Direct Digital Control Equipment and Existing Automated Energy Management System Remote Terminal Unit in AC Switchboard Room:

1. Description:

   a. Pairs, 24AWG stranded (7x32) tinned copper conductors, twisted pairs FEP insulation, overall 100% shield, 22 AWG stranded tinned copper drain wire, overall tinned copper braid shield (90% coverage), FEP jacket.

2. Conductor:

   a. Number of Pairs: 2
   b. Total Number of Conductors: 4
   c. AWG: 24
   d. Stranding: 7x32
   e. Conductor Material: TC - Tinned Copper

3. Insulation:

   a. Insulation Material: FEP - Fluorinated Ethylene Propylene

4. Pair:

   a. Pair Lay Length: 2 in.
   b. Pair Twists/ft.: 6
   c. Pair Color Code: Pair#1: Blue/White with Blue Stripe
   d. Pair#2: Orange/White with Orange Stripe

5. Outer Shield:

   a. Outer Shield Type: Tape/Braid
   b. Outer Shield Material: Aluminum Foil-Polyester Tape 100% Coverage Braid TC - Tinned Copper Braid 90% Coverage

6. Outer Shield Drain Wire:

   a. Outer Shield Drain Wire AWG: 22
   b. Outer Shield Drain Wire Stranding: 7x32
   c. Outer Shield Drain Wire Conductor: TC - Tinned Copper

7. Outer Jacket:

   a. Outer Jacket Material: FEP - Fluorinated Ethylene Propylene
   b. Outer Jacket Color: Gray

8. Mechanical Characteristics:

   a. Operating Temperature Range: -40degC To +150degC
   b. Min. Pulling Tension: 50 lbs.
   c. Min. Bend Radius (Install): 2.75 in.

9. Applicable Specifications and Agency Compliance:

   a. NEC/(UL) Specification CMP
   b. CEC/C(UL) Specification CMP

10. Flame Test:

    a. UL Flame Test: UL910 Steiner Tunnel
    b. C(UL) Flame Test: FT6

11. Electrical Characteristics

    a. Nominal Characteristic Impedance: 120Ohms
    b. Nominal Capacitance Conductor to Conductor @ 1 KHZ: 12pF/ft
    c. Nominal Cap. Cond. To Other Cond. & Shield @ 1 KHZ: 22pF/ft
    d. Nominal Velocity of Propagation: 76%
    e. Nominal Conductor DC Resistance @ 20 Deg. C: 24 Ohms/1000ft
    f. Nominal Outer Shield DC Resistance @ 20 Deg. C: 2.4 Ohms/1000ft
    g. Operating Voltage: U 300 V RMS

12. Put-ups:

    a. Put-ups: 2000 ft.

13. Submittal:

    a. Submit cable specifications and test certifications.

PART 3 – EXECUTION:

3.01 EXAMINATION:

A. Verify that power supply is available to control panels.

B. Verify that duct-, pipe-, and equipment-mounted devices and wiring are installed before proceeding with installation.

3.02 INSTALLATION:

A. Install equipment level and plumb.

B. Install software in Direct Digital Control Panels (DDCP). Implement all features of programs to specified requirements and as appropriate to sequence of operation.

C. Connect and configure equipment and software to achieve sequence of operation specified.

D. Verify location of thermostats, humidistats, and other exposed control sensors with plans and room details before installation. Locate all 60 inches above the floor.

E. Install averaging elements in ducts and plenums in crossing or zigzag pattern.

F. Install guards on space temperature sensors. Provide security hardware and fasteners.

G. Install labels and nameplates to identify control components according to Division 15 Section "Basic Mechanical Materials and Methods."

H. Install labels and nameplates to identify control components according to Division 15 Section "Mechanical Identification."

I. Install hydronic instrument wells, valves, and other accessories according to Division 15 Section "Piping Systems."

3.03 ELECTRICAL WIRING AND CONNECTION INSTALLATION:

A. General Requirements:

1. All wiring between DDCP's, sensors, control devices and necessary conduit for the wiring shall be provided under this section of the specification. All control wiring which is provided under this section of the specification shall be in accordance with requirements set forth in Division 16 - Electrical and the National Electrical Codes.
2. Provide control wire and cable including communication media required for successful operation of the BAS. All wiring and cable shall comply with national and local electrical codes.

B. Wire and Cable:

1. Low capacitance RS-485 Communication cable shall be twisted, shielded, and a minimum of 24 AWG. Shielding shall be grounded to the signal ground. The cable shall conform to Belden 9272 or equal. RS-485 cable and conduit shall be installed between the DDCP and the existing AEMS RTU cabinet in the AC Switchboard Room with minimum of 10 feet of

coiled cable left in the AEMS RTU cabinet for termination to internal components by WMATA personnel.

2. Sensor Wiring: Sensor wiring shall be 18 AWG as specified, shielded (if necessary), 2 or 3 wire to match analog function hardware.
3. Control wiring for digital functions shall be 22 AWG minimum, the insulation must be rated at 300 volt minimum.
4. Control wiring for analog functions shall be 22 AWG minimum, the insulation must be rated at 300 volt minimum, shielded (if required), 2 or 3 wire to match analog function hardware.

C. Conduit: All wiring within the mechanical space shall be installed in galvanized rigid steel conduit with threaded fittings. Wiring to sensors mounted on air conditioning units and associated chilled water piping shall be installed in a minimum 18-inch long length of liquid tight flexible metal conduit at the sensor location. Existing conduits for control wiring shall be retained and reused where the routing for existing conduits is suitable for new conduit routing requirements for new control wiring work subject to approval by the Contracting Officer Representative (COR).

D. Labeling: All wiring, including input/output identifications, components and enclosures shall be clearly labeled and documented. All labeling shall be in a logical consecutive order. All labeling shall appear on the as-built drawings clearly and precisely duplicating the actual installation.

E. All work shall be installed in accordance with both national and governing codes. Where the drawings and job specifications conflict with code requirements, the contractor shall make the necessary adjustments and shall base his bid on an installation which complies with those codes. Where plans and specifications exceed code requirements, the plans and specifications shall govern.

F. Install raceways, boxes, and cabinets according to Division 16 Section "Raceways and Boxes."

G. Install building wire and cable according to Division 16 Section "Wire and Cable."

H. Install signal and communication cable according to Division 16 Section "Wire and Cable" with the following additional requirements:

1. Conceal cable, except in mechanical rooms and areas where other conduit and piping are exposed.
2. Install exposed cable in galvanized rigid steel conduit.
3. Install concealed cable in galvanized rigid steel conduit.
4. Bundle and harness multiconductor instrument cable in place of single cables where several cables follow a common path.
5. Fasten flexible conductors, bridging cabinets and doors, along hinge side; protect against abrasion. Tie and support conductors.
6. Number-code or color-code conductors for future identification and service of control system, except local individual room control cables.

I. Make connection using RS-485 cable between the DDCP and the existing AEMS RTU located in the Chiller Plant Room. Field verify exact conditions and provide a compatible system.

J. Connect manual-reset limit controls independent of manual-control switch positions.

K. Connect hand-off-auto selector switches to override automatic interlock controls when switch is in hand position.

L. Connect electrical components to wiring systems and to ground as indicated and as instructed by the manufacturer. Tighten connectors and terminals, including screws and bolts, according to equipment manufacturer's published torque values for equipment connectors. Where manufacturer's torque requirements are not indicated, tighten connectors and terminals according to tightening requirements specified in UL 486A.

M. Grounding: Ground controllers and cabinets to a good earth ground. Ground controller to a ground in accordance with Division 16 provisions. Grounding of the green ac ground wire at the breaker panel is not adequate. Run metal conduit from controller panels to adequate building ground. Ground sensor drain wire shields at controller end.

N. The Contractor shall be responsible for correcting all associated ground loop problems.

O. Perform installation under supervision of competent technicians regularly employed in the installation of DDC systems. Provide components for a complete and operational DDC system. Provide all power and signal wiring to controlled devices such as valve and damper actuators. Source of power wiring shall be extended from the DDC panels. A control power source for each DDC panel is indicated on the electrical drawings. The DDC panel is identified as Temperature Control Panel (TCP) on the electrical drawings.

3.04 CONNECTIONS:

A. Piping installation requirements are specified in other Division 15 Sections. Drawings indicate general arrangement of piping, fittings, and specialties.

1. Install piping adjacent to machine to allow service and maintenance.

B. Ground equipment.

1. Tighten electrical connectors and terminals according to manufacturer's published torque-tightening values. If manufacturer's torque values are not indicated, use those specified in UL 486A and UL 486B.

3.05 FIELD QUALITY CONTROL:

A. Manufacturer's Field Service: Engage a factory-authorized service representative to inspect field-assembled components and equipment installation, including piping and electrical connections.

1. Operational Test: After electrical circuitry has been energized, start units to confirm proper unit operation. Remove malfunctioning units, replace with new units, and retest.
2. Test and adjust controls and safeties. Replace damaged and malfunctioning controls and equipment, and retest.
3. Calibration test electronic controllers by disconnecting input sensors and simulating operation with compatible signal generator.

B. Engage a factory-authorized service representative to perform startup service.

C. Replace damaged or malfunctioning controls and equipment.

1. Start, test, and adjust control systems.

2. Demonstrate compliance with requirements, including calibration and testing, and control sequences.
3. Adjust, calibrate, and fine tune circuits and equipment to achieve sequence of operation specified.

D. Verify DDC as follows:

1. Verify software including automatic restart, control sequences, scheduling, reset controls, and occupied/unoccupied cycles.
2. Verify operation of operator interface via a laptop computer.
3. Verify local control units including self-diagnostics.
4. Verify operation of annunciator panels.
5. Verify successful transmission of specified data points through the digital interface between the DDC and the existing Automated Energy Management System, Remote Terminal Unit (AEMS RTU).

3.06 DEMONSTRATION:

A. Engage a factory-authorized service representative to train WMATA maintenance personnel to adjust, operate, and maintain control systems and components.

1. Train WMATA maintenance personnel on procedures and schedules for starting and stopping, troubleshooting, servicing, and maintaining equipment and schedules.
2. Provide operator training on data display, alarm and status descriptors, requesting data, executing commands, calibrating and adjusting devices, resetting default values, and requesting logs. Include a minimum of 40 hours' dedicated instructor time on-site.
3. Review data in maintenance manuals. Refer to Division 1 Section "Contract Closeout."
4. Review data in maintenance manuals. Refer to Division 1 Section "Operation and Maintenance Data."
5. Schedule training with COR with at least seven days' advance notice.

3.07 ON-SITE ASSISTANCE AND TRAINING:

A. Occupancy Adjustments: Within one year of date of Substantial Completion, provide up to three Project site visits, when requested by COR, to adjust and calibrate components and to assist WMATA personnel in making program changes and in adjusting controls to suit actual conditions.

B. A minimum of two (2) days of operator training shall be provided for four (4) system operators.

C. Submit lesson plans to the COR for the training phases to include type of training to be provided and a list of reference material for review and approval by the COR.

D. Provide the services of competent instructors who will give full instruction to designated personnel in the operation, maintenance, and programming of the BAS. Coordinate the training specifically to the system installed. Instructors shall be thoroughly familiar with the installed system. The number of training days of instruction furnished shall be as specified. Provide a training manual for each student at each training phase which describes in detail the data included in each training program. Provide four (4) additional copies to the Owner. Training shall include but not be limited to:

1. Operation of equipment

2. Programming
3. Diagnostics
4. Failure recovery procedures
5. Alarm response

END OF SECTION

Figure 27, Field Control Wiring Diagram

NOTE: Complete notes are on the following page.

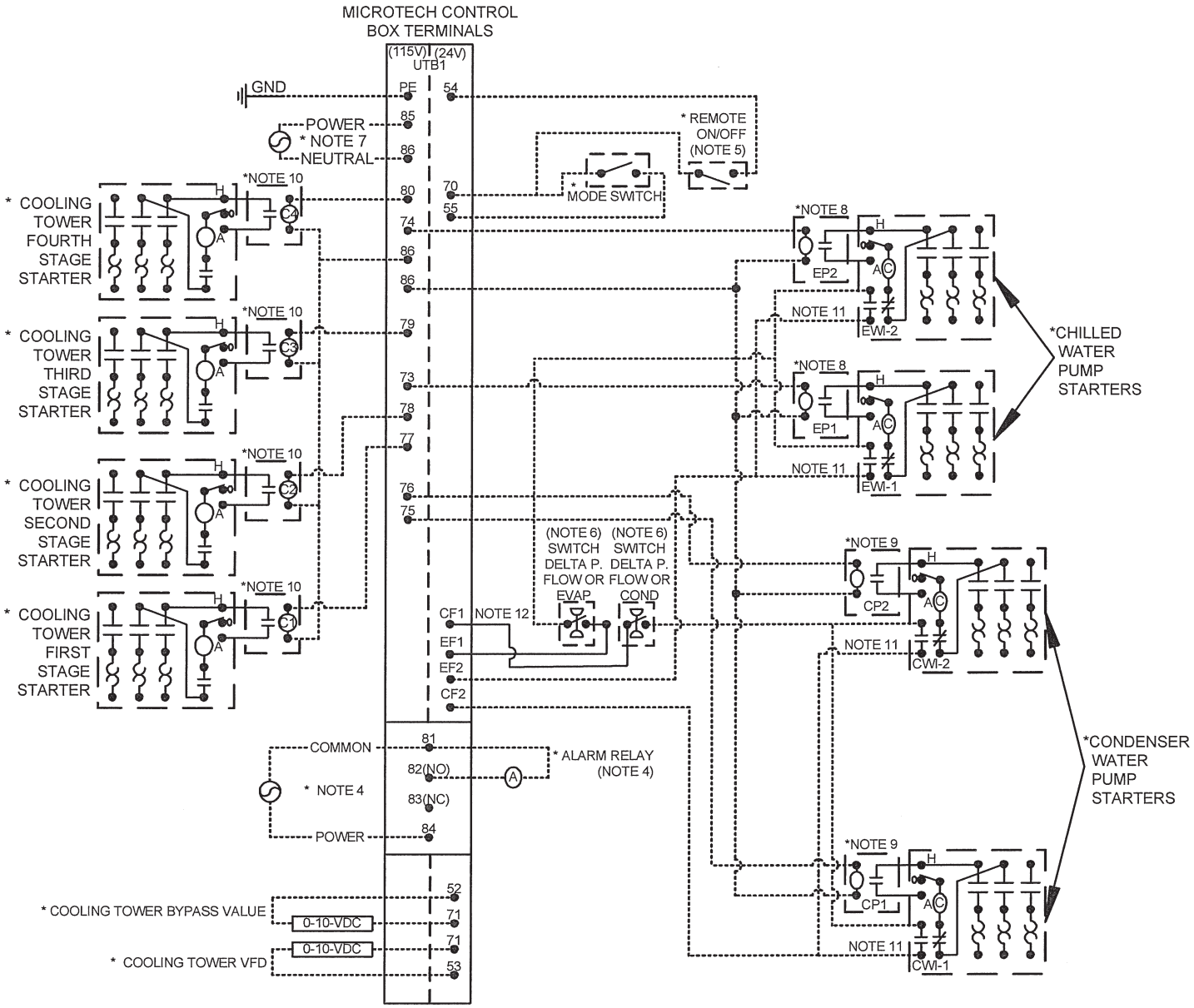

Field Wiring Diagram Notes

1. Compressor front end box is factory mounted and wired. All line side wiring must be wired in accordance with the nec and be made with copper wire and copper lugs only. Use only copper supply wires with ampacity based on 75°C conductor rating. Main power wiring between the front end box and compressor terminals is factory installed.

- Minimum wire size for 115 VAC is 12 ga. for a maximum length of 50 feet. If greater than 50 feet refer to Manufacturer for recommended wire size minimum. Wire size for 24 VAC is 18 ga. All wiring to be installed as NEC class 1 wiring system. All 24 VAC wiring must be run in separate conduit from 115 VAC wiring. Wiring must be wired in accordance with NEC and connection to be made with copper wire and copper lugs only.

2. For optional sensor wiring see unit control diagram. It is recommended that DC wires be run separately from 115 VAC wiring.

3. A customer furnished 24 or 120 VAC power for alarm relay coil may be connected between Unit Terminal Board (UTB1) terminals 84 power and 81 neutral of the control panel. For normally open contacts wire between 82 & 81. For normally closed wire between 83 & 81. The alarm is operator programmable. Maximum rating of the alarm relay coil is 25 VA.

4. Remote on/off control of unit can be accomplished by installing a set of dry contacts between terminals 70 and 54.

5. Thermal dispersion flow switches for the evaporator and condenser are factory mounted as standard and provide adequate flow loss protection. If desired, additional flow or pressure differential switches can be customer supplied, mounted and wired as shown. A factory wired evaporator flow switch is connected between EF1 and EF2, and a condenser flow switch between CF1 and CF2. Any additional devices must be wired in series with them.
   If field supplied pressure differential switches are used then these must be installed across the vessel and not the pump. They must be suitable for 24 VAC and low current application.

6. Customer supplied 115 VAC 20 amp power for optional evaporator and condenser water pump control power and tower fans is supplied to Unit Control Terminals (UTB1) 85 power / 86 neutral, and equipment ground.

7. Optional customer supplied 115 VAC 25 VA maximum coil rated chilled water pump relay (EP1 and EP2) may be wired as shown. This optional will cycle the chilled water pump in response to chiller demand.

8. The condenser water pump must cycle with the unit. A customer supplied 115 VAC 25 VA maximum coil rated condenser water pump relay (CP1 and CP2) is to be wired as shown. Units with free cooling must have condenser water above 60°F before starting.

9. Optional customer supplied 115 VAC, 25 VA maximum coil rated cooling tower fan relays (C1 – C2 standard, C3 – C4 optional) may be wired as shown. This option will cycle the cooling tower fans in order to maintain unit head pressure.

10. Auxiliary 24 VAC rated contacts in both the chilled water and condenser water pump starters should be wired as shown.

General Decision Number: MD180057 **## 05/25/2018 ##** MD57

Superseded General Decision Number: MD20170057

State: Maryland

Construction Type: Building

County: Montgomery County in Maryland.

BUILDING CONSTRUCTION PROJECTS (does not include single family homes or apartments up to and including 4 stories).

Note: Under Executive Order (EO) 13658, an hourly minimum wage of $10.35 for calendar year 2018 applies to all contracts subject to the Davis-Bacon Act for which the contract is awarded (and any solicitation was issued) on or after January 1, 2015. If this contract is covered by the EO, the contractor must pay all workers in any classification listed on this wage determination at least $10.35 (or the applicable wage rate listed on this wage determination, if it is higher) for all hours spent performing on the contract in calendar year 2018. The EO minimum wage rate will be adjusted annually. Please note that this EO applies to the above – mentioned types of contracts entered into by the federal government that are subject to the Davis-Bacon Related Acts, including those set forth at 29 CFR 5.1(a)(2)-(60). Additional information on contractor requirements and worker protections under the EO is available at www.dol.gov/whd/govcontracts.

Modification Number	Publication Date
0	01/05/2018
1	01/12/2018
2	02/09/2018
3	02/23/2018
4	03/23/2018
5	04/20/2018
6	05/11/2018
##7	**05/25/2018##**

ASBE0024-007 10/01/2017

	Rates	Fringes
ASBESTOS WORKER/HEAT & FROST INSULATOR	$ 35.13	16.22

Includes the application of all insulating materials, protective coverings, coatings and finishes to all types of mechanical systems

---

ASBE0024-010 10/01/2017

	Rates	Fringes
ASBESTOS WORKER: HAZARDOUS MATERIAL HANDLER (Removal of hazardous material from ceilings, floors, mechanical systems, and walls)	$ 22.81	7.34

---

* BRMD0001-006 04/30/2017

	Rates	Fringes
TILE SETTER	$ 27.44	11.44

---

* BRMD0001-009 04/30/2017

	Rates	Fringes
TILE FINISHER	$ 22.51	10.50

---

* BRMD0001-011 04/30/2017

	Rates	Fringes
BRICKLAYER (Excluding Pointing, Caulking and Cleaning)	$ 30.91	10.24

---

* BRMD0001-012 04/30/2017

	Rates	Fringes
MASON – STONE	$ 36.91	16.55

CARP0177-011 01/01/2018

	Rates	Fringes
CARPENTER (Including Acoustical Ceiling Installation, Drywall Hanging, Metal Stud Installation and Form Work)	$ 28.46	11.53

CARP0219-001 05/01/2017

	Rates	Fringes
MILLWRIGHT	$ 32.49	11.23

ELEC0026-021 09/11/2017 ##

	Rates	**Fringes**
ELECTRICIAN (Communication and Sound Equipment)	**$ 27.80**	**10.55**

ELEC0026-022 11/06/2017

	Rates	Fringes
ELECTRICIAN (Including low voltage wiring for and installation of alarms, HVAC controls)	$ 45.15	17.15+a

a. PAID HOLIDAYS: New Year's Day, Inauguration Day, Martin Luther King Jr.'s Birthday, Memorial Day, Independence Day, Labor Day, Veterans' Day, Thanksgiving Day, the day after Thanksgiving Day and Christmas Day.

ELEV0010-001 01/01/2018

	Rates	Fringes
ELEVATOR MECHANIC	$ 44.12	32.645+a+b

a. PAID HOLIDAYS: New Year's Day, Memorial Day, Independence Day, Labor Day, Veterans' Day, Thanksgiving Day, Christmas Day and the Friday after Thanksgiving.

b. VACATIONS: Employer contributes 8% of basic hourly rate for 5 years or more of service; 6% of basic hourly rate for 6 months to 5 years of service as vacation pay credit.

ENGI0077-018 05/01/2017

	Rates	Fringes
OPERATOR: Bulldozer	$ 30.56	8.95+a

OPERATOR: Loader Front End Loaders 3 1/2 cubic yards and above	$ 30.56	8.95+a
Front End Loaders Below 3 /2 cubic yards	$ 30.56	8.95+aa.

PAID HOLIDAYS: New Year's Day, Inaugural Day, Decoration Day, Independence Day, Labor Day, Martin Luther King's Birthday, Veterans' Day, Thanksgiving Day, Friday after Thanksgiving and Christmas Day.

IRON0005-011 06/01/2017

	Rates	Fringes
IRONWORKER, STRUCTURAL AND ORNAMENTAL	$ 31.15	20.63

LABO0657-017 06/01/2015

	Rates	Fringes
LABORER: Mason Tender - Cement/Concrete	$ 22.63	7.31
LABORER: Pipelayer	$ 22.63	7.31

PAIN0051-014 06/01/2017

	Rates	Fringes
GLAZIER Glazing Contracts $2 million and under	$ 25.74	11.55
Glazing Contracts over $2million	$ 29.87	11.55

PAIN0051-019 06/01/2017

	Rates	Fringes
PAINTER Brush, Roller, Spray and Drywall Finisher/Taper	$ 25.06	9.66
Industrial	$ 30.90	10.49

PLAS0891-005 07/01/2016

	Rates	Fringes
PLASTERER	$ 28.83	6.05

PLAS0891-006 02/01/2018

	Rates	Fringes
CEMENT MASON/CONCRETE FINISHER	$ 28.15	10.58

PLAS0891-008 08/01/2016

	Rates	Fringes
PLASTERER (Fireproofing Including Sprayer, Mixer, and Handler)		
Handler	$ 16.50	4.89
Mixer/Pump	$ 18.50	4.89
Sprayer	$ 23.00	4.89

PLUM0005-010 08/01/2017

	Rates	Fringes
PLUMBER	$ 41.67	17.60+a

a. PAID HOLIDAYS: Labor Day, Veterans' Day, Thanksgiving Day and the day after Thanksgiving, Christmas Day, New Year's Day, Martin Luther King's Birthday, Memorial Day and the Fourth of July.

PLUM0602-011 08/01/2017

May 25, 2018

Re: IFB FQ18102/KKB
Replacement of Chiller and Cooling Tower Accessories
At Eight (8) Metro-Rail Stations: DC, MD, and VA
Request for Clarification/Information Response

Dear Prospective Respondent:

In response to your Request for Clarification/Information, the response is provided to question.

WMATA appreciates your interest in its procurement process and we look forward to receiving your bid on or before June 6, 2018.

As always, should you require further assistance, kindly contact Kamoru Banjo of the Office of Procurement and Materials by email at kkbanjo@wmata.com.

Sincerely,

Norie A. Calvert
Contracting Officer
Office of Procurement and Materials

Washington Metropolitan Area Transit Authority

600 Fifth Street, NW
Washington, D.C. 20001
202/962-1234

By Metrorail:
Judiciary Square-Red Line
Gallery Place-Chinatown
Red, Green and Yellow Lines

A District of Columbia Maryland and Virginia Transit Partnership

Solicitation FQ18102/KKB; Replacement of Chiller and Cooling Accessories at Eight (8) Metro-Rail Stations: DC, MD, and VA
RFI Log Responses
RFI Responses/Clarifications-RFI No. 53 thru 64

RFI No.	Amendment No.	RFI Description	RFI Response
53		The valve schedules are not matching up with the detail drawings. Types, sizes and amounts are conflicting. Which document should we base our bid on?	Bid should be based off the floor plan drawings with the valve schedule used as a reference.
54	5	Referencing Amendment 4 Are the three mechanical drawings issued in amendment 2 going to be officially deleted from this contract?	Refer to addendum no. 05 for its deletion
55		Referencing Amendment 4 Item 4 Contract Drawings. Please define drawing set 11 of 29 since it is deleted in its entirety and there is no reference to drawing of sheet numbers.	Drawing No. CWPA 6-M-500, CWPA6-M-501, CWPA6-M-600, CWPA6-M-600, CWPA6-M-601, CWPA6-M-610, CWPA6-M-611, CWPA6-E-100, Sheet Nos. 61-67 of 173 Respectively. The solicitation drawings contained two sets of above Drawings, please discard the duplicated set.
56	5	Referencing Amendment 4 Drawing No. CWPA6-E-100 is deleted in both Drawing Set 12 and 19. In set 19 Sheet No. 115 of 173 is a mechanical drawing not an electrical drawing. Please clarify.	The drawing number was cited erroneously, the correct drawing number is CWPG2-M-103. It was a triplicate drawing. Only one is required. Refer to addendum no. 05 for the revised drawing number.
57		Referencing Page 1, Item 3 “Contract Drawings” of Amendment No. 02:	Refer to RFI #54 response

RFI No.	Amendment No.	RFI Description	RFI Response
		The station drawings referenced to be deleted and substituted are not included in our set of contract drawings. The title of the project in the substituted drawings reads " Replacement of Chillers and Cooling Towers at Three Metro-Rail Stations". The Contract Number reads FQ17162 whereas the Eight Metro-Rail stations Contract No. is FQ18102. Please clarify.	
58		Please confirm that FQ18102 is a plan and spec project. There are several references in Spec section 00700 to design-build criteria.	A Design-Builder means a Contractor when the solicitation does not call for a design work. This is a Design-Bid-Build solicitation meaning the design work had been completed by the Authority, the Authority will bid the requirement and select a contractor to build the work.
59		The attached substitution form is to be provided with the bid package. Please advise how the pricing should be provided if a substitute manufacturer's equipment is used. In case substitute manufacturer is rejected, should the bidder provided one price with substitute manufacturer and an alternate price with specified manufacturers?	The solicitation does not require the Bidder to submit two pricings. Either the Offeror uses the specified or equivalent equipment/products, the bidder must submit one bid price. Alternative bid price is unacceptable. The Bidder could propose specified and equivalent equipment/products, but there must be only one (1) Total Bid Price submitted.
60		Spec section 15625 2.01.B.1 listed the requirement for the chillers to have two magnetic bearing centrifugal compressors. The York/JCI magnetic bearing chillers utilize only one very reliable magnetic bearing compressor on the Chillers.	

RFI No.	Amendment No.	RFI Description	RFI Response
		Can York/JCI bid the magnetic bearing chillers on the project?	Section 15625-Chillers, Subsection 2.01-Products and Materials of Solicitation FQ18102/KKB lists the chiller salient features that explicitly describe the chiller, provide a chiller that includes the listed features and otherwise complies with the solicitation requirements.
61		Spec section 15625 2.01.B.1 listed the requirement for the chillers to have two magnetic bearing centrifugal compressors. The York/JCI magnetic bearing chillers utilize only one very reliable magnetic bearing compressor on the Chillers. Can York/JCI bid the magnetic bearing chillers on the project?	Refer to RFI #60 response
62		On all of the stations it states in the mechanical drawings to install new sump pumps at the cooling towers. There is no piping shown for these and there is nothing about these in the electrical drawings. Please confirm this note about sum pumps is to be deleted and is not in the scope for these stations.	Comply with “Key Notes” related to sump pumps on Mechanical Drawings.
63		Please confirm that triple duty valves are permissible at all 8 stations	Comply with drawing legend, drawings and specifications.
64		For the Bethesda and Columbia Stations, the mechanical drawings state to replace the motors with direct drive motors and to replace the louvers. However, these are closed cell circuit coolers at	Comply with the contract drawings and specifications.

RFI No.	Amendment No.	RFI Description	RFI Response
		these 2 stations that utilize centrifugal fans and they do not have louvers. Please confirm these notes are to be deleted and are not in scope for these 2 stations.	